Mariposa®

6' Bath

K-1259-L

Features

- Integral flange.
- Left drain.
- Integral lumbar support and armrests for comfort.
- Textured bottom surface.
- 72" (1829 mm) x 36" (914 mm) x 20" (508 mm)

Material

- Acrylic

Installation

- Alcove

Recommended Accessories

K-1283 Apron
K-1491 Bath/Whirlpool Pillow
K-7166-AF Bath Drain
K-24916 Wireless Music Kit
K-1601 Bath/Whirlpool Footstop
K-7213 27" Cable Bath Drain
K-7214 27" Cable Bath Drain
K-7259 Clearflo Bath Drain
K-37382 45" Rough-in Cable Bath Drain

Codes/Standards

CSA B45.5/IAPMO Z124
ASTM E162
ASTM E662
Greenguard UL 2818 - Gold

KOHLER® One-Year Limited Warranty

See website for detailed warranty information.

Available Color/Finishes

Color tiles intended for reference only.

Color	Code	Description
	0	White
	96	Biscuit
	47	Almond
	NY	Dune
	G9	Sandbar

Mariposa®

6' Bath

K-1259-L

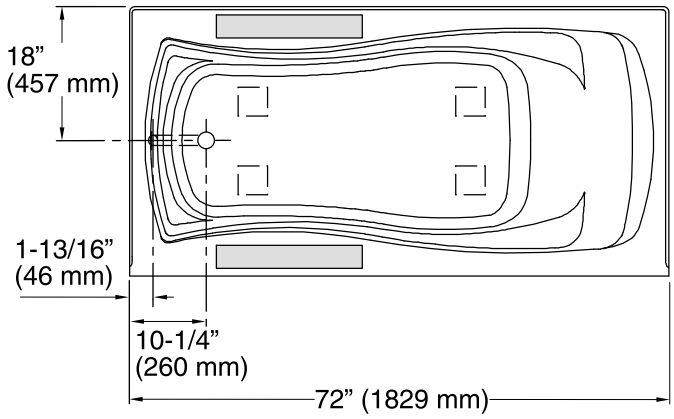

No change in measurements if connected with drain illustrated. (K-7166-AF)

Recommended Faucet Area

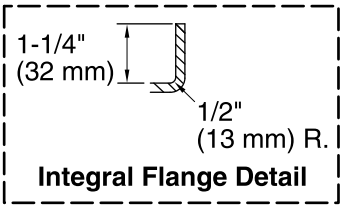

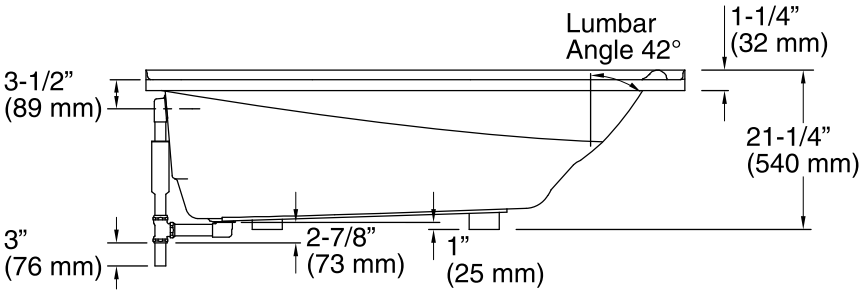

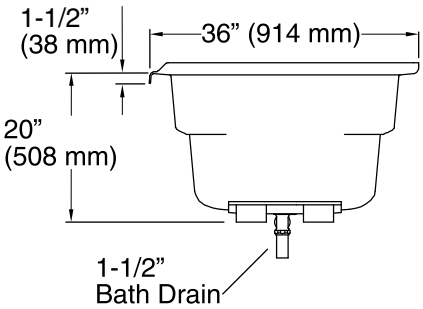

Technical Information

All product dimensions are nominal.

Installation:	3-Wall Alcove
Drain location:	Left
Basin area, bottom:	50" x 24" (1270 mm x 610 mm)
Basin area, top:	65" x 27" (1651 mm x 686 mm)
Weight:	77 lbs (34.9 kg)
Minimum floor load:	39 lbs/ft² (190.4 kg/m²)
Water depth:	14" (356 mm)
Water capacity:	72 gal (272.5 L)
Minimum flat for door:	2-1/8" (54 mm)

Notes

Measure your actual product for rough-in details.

Install this product according to the installation instructions.

The hot water supply should be 70% of the capacity of the bath or greater. Installations will vary.