GS8891,5,8ACL
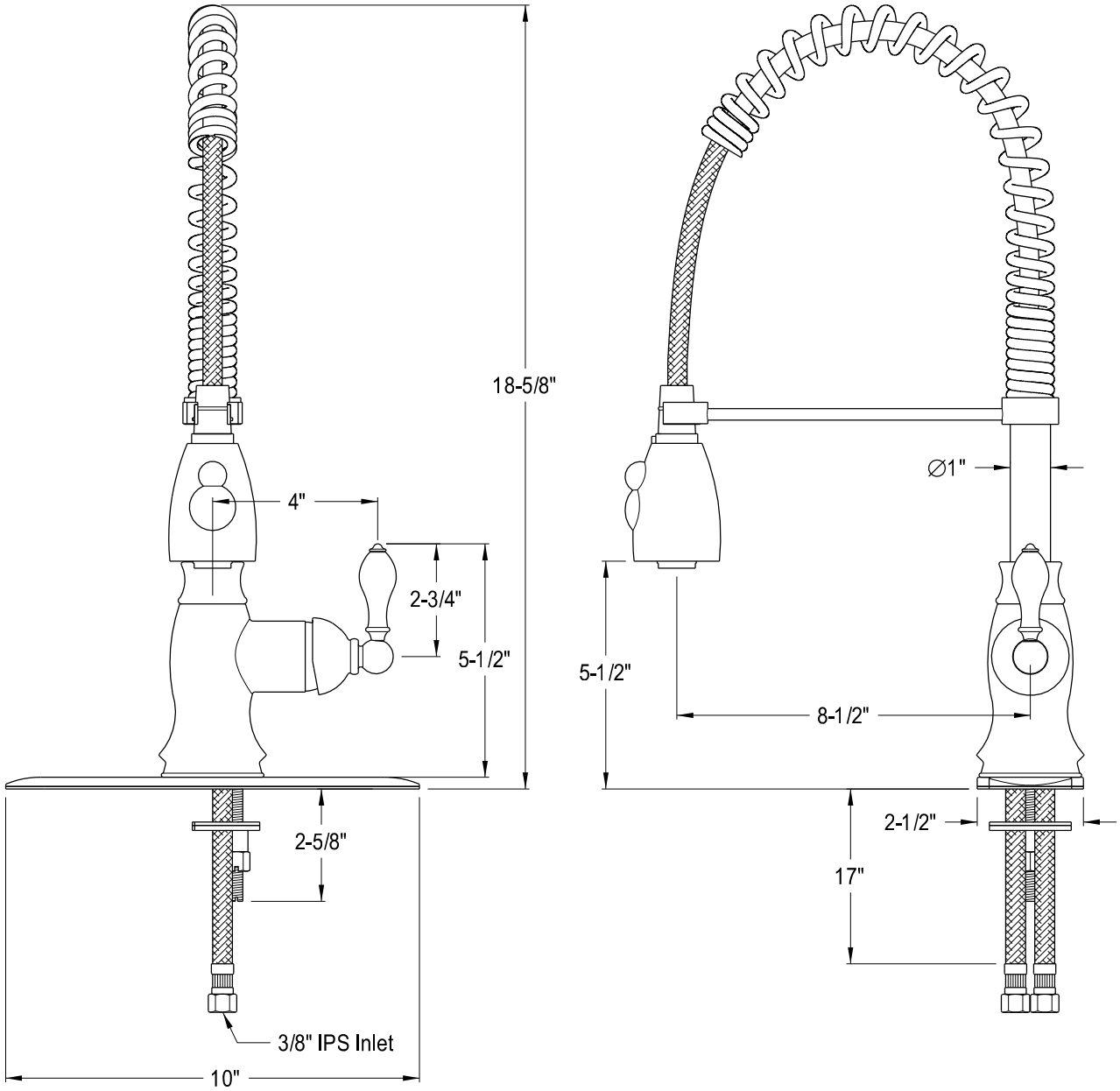
Single Handle Kitchen Faucet With Spray