DLL3161,2,5,8
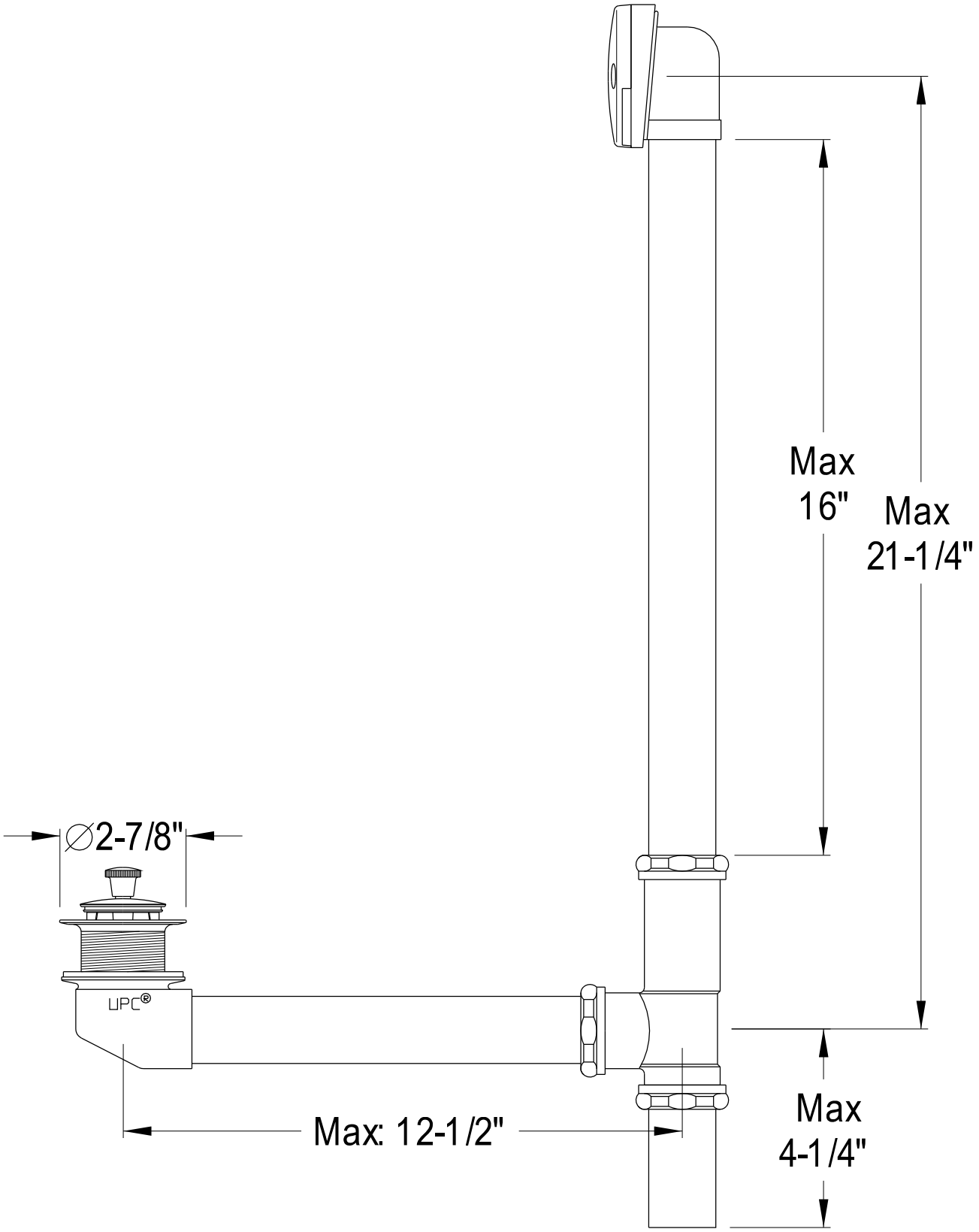
16" Tub Waste & Overflow With Lift 'N Lock Drain, 17 Gauge