KVPB2522710,1,6,7
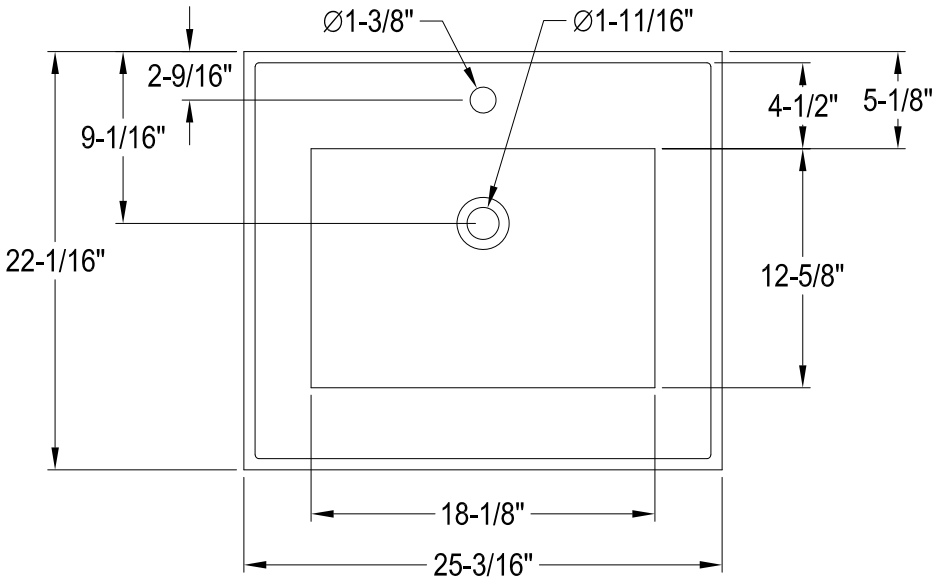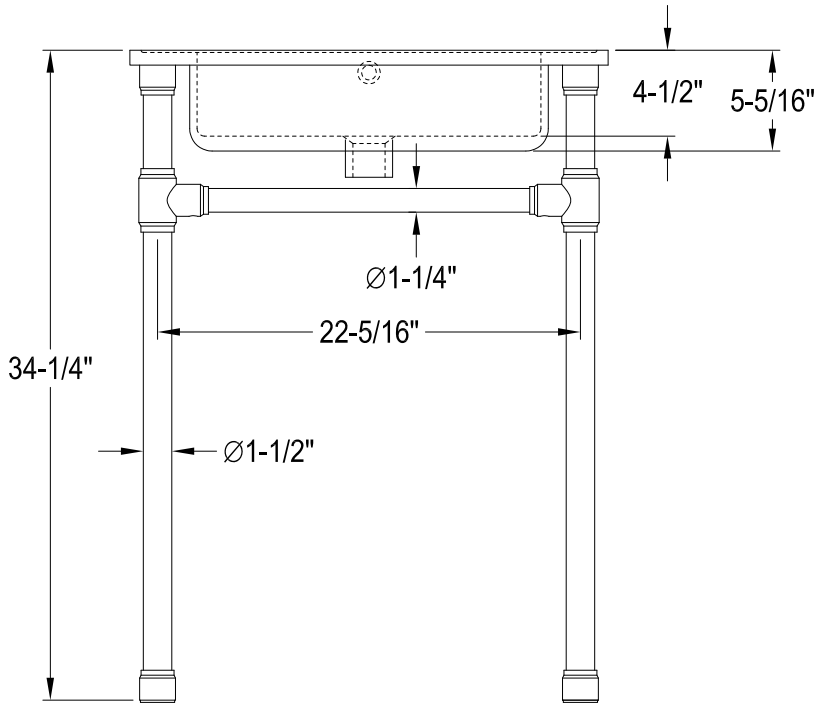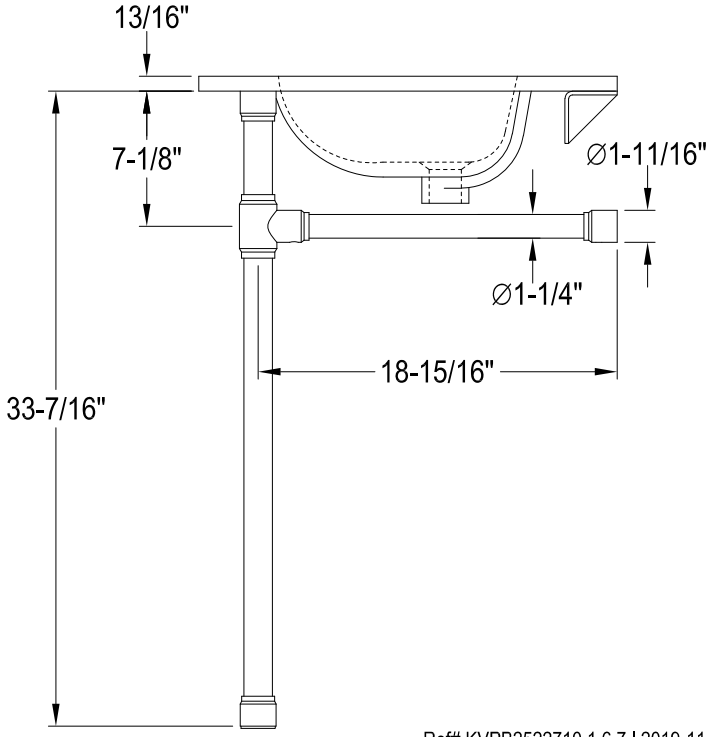
Ceramic Vanity Top With Stainless Steel Leg