Product data sheet (PDF)

Axor Bouroullec
HG basin mixer wall mounted Axor

Description

. Mineral cast with durable gel coat finish
. M1 ceramic cartridge
. Cascade no-clog aerator
. Optimal installation with Axor Bouroullec washbasins #19945000, 19946000
. Requires 2 x 1/2" female outlet, offset installation
. weight: 40 lbs
. Optional drain
. Flow 1.5 GPM: 30% water savings

Finishes	Art. no.	Price excl. VAT
white/chrome	19132401	1.298,00 $

Product image
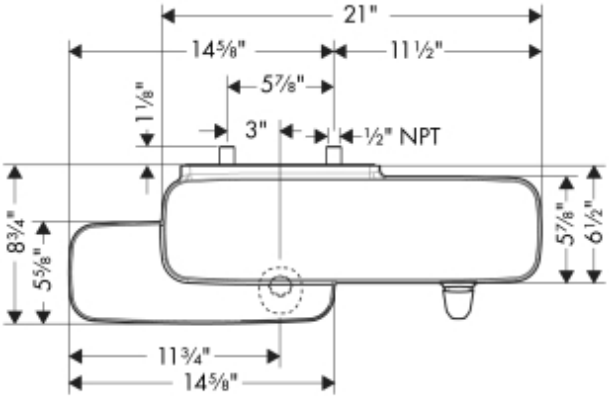
Scale drawing