GROHE

ENJOY WATER®

Description

- Single Lever Metal Handle
- GROHE Silk®Move Ceramic Cartridge
- Solid Brass construction
- 9 1/8" Spout Reach
- SpeedClean® Anti-Lime System
- Locking Dual Spray Control- switches back and forth between regular flow and spray
- Variable Handle Positioning
- Includes: Escutcheon, Soap Dispenser stainless steel flexible supply lines
- Quick Installation System

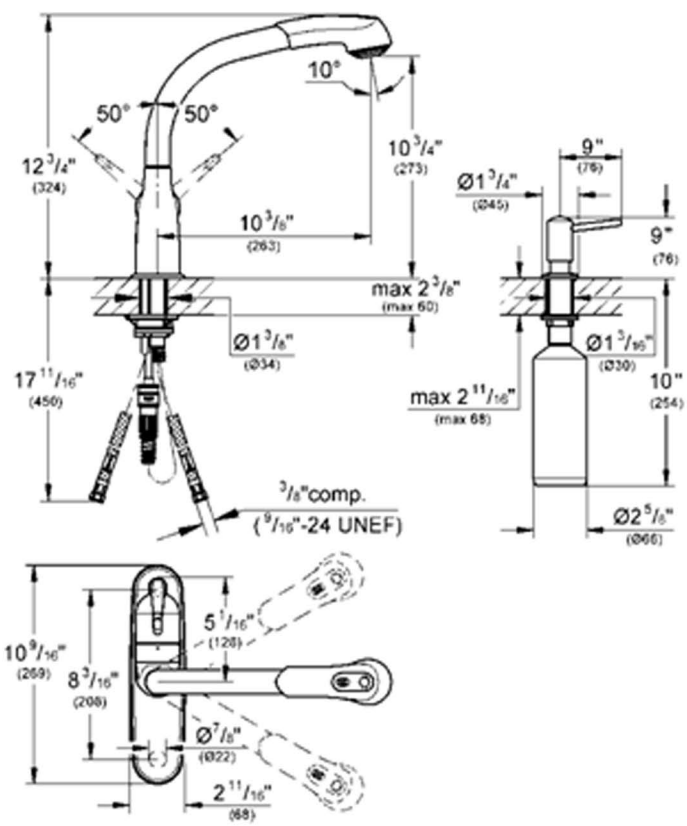

Flow Rate

1.5 gpm (5.7 l/min)

Code Compliance

ASME/ANSI A112.18.1M
ANSI/NSF Standard 61
CSA Standard B125.1-05
ADA Compliant

Available Finishes

Starlight® Crome

GROHE SilkMove® GROHE StarLight® SmoothTurn ComfortHeight