Serie Milano

7843100

Tub Spout with Diverter

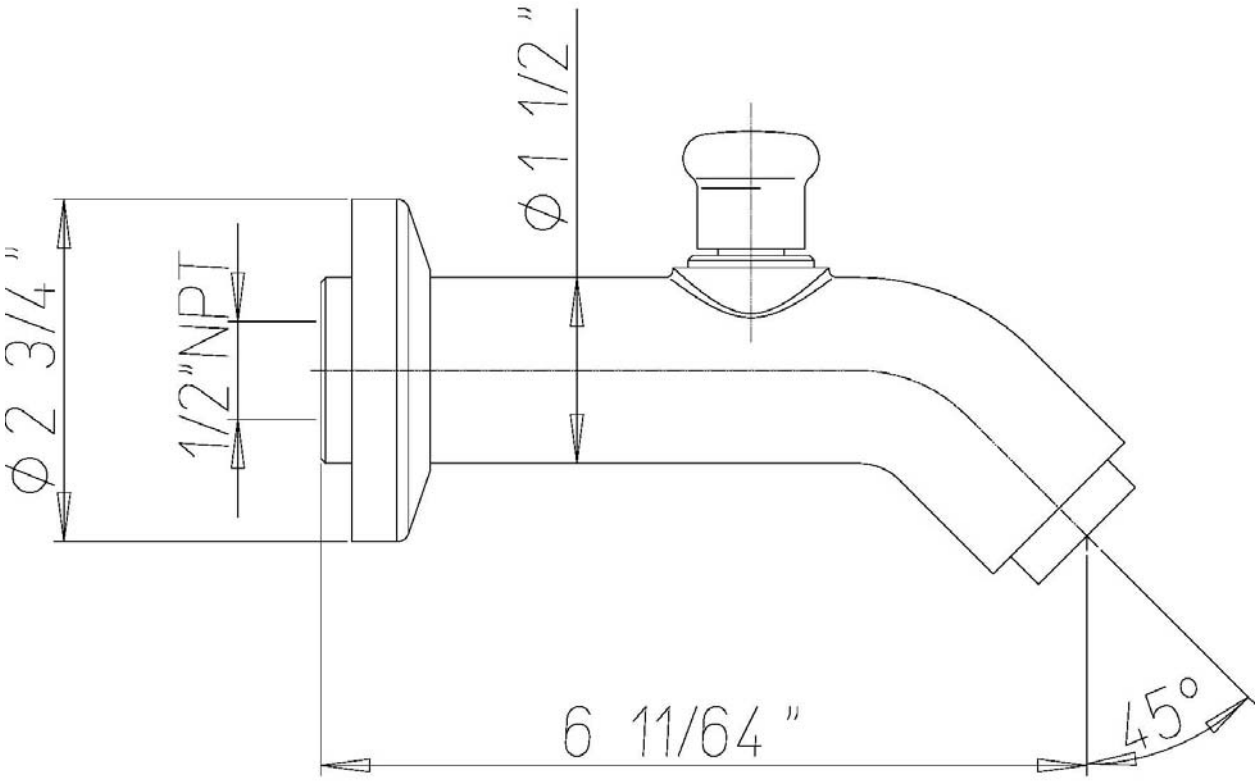

1-877-55-FORTIS (36784)
WWW.FORTISFAUCET.COM
19701 Da Vinci
Lake Forest, CA 92610

FORTIS
PURO DESIGN ITALIANO

SPECIFICATION SUBMITTAL

Serie Milano

7843100

Tub Spout with Diverter

STANDARDS

- Comply with ASME A112.18.1-B125.1 requirements
- Certified By CSA international

Finishes	7843100PC	7843100BN
Polished Chrome	X	
Brushed Nickel		X

Features	7843100PC	7843100BN
Solid Brass Construction	X	X
½" NPT inlet connector	X	X
Polished Tub Spout with Diverter	X	X
Step by Step Installation Instructions	X	X
Limited Lifetime Warranty	X	X

Project: _____
Contractor: _____

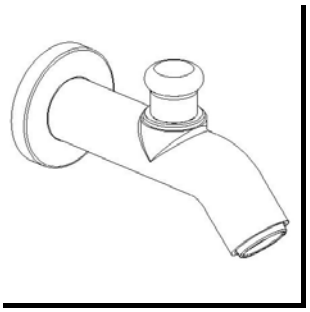

1-877-55-FORTIS (36784)
WWW.FORTISFAUCET.COM
19701 Da Vinci
Lake Forest, CA 92610

FORTIS
PURO DESIGN ITALIANO