Contemporary Lighting™

Installation Instructions
Model E22773-91PC

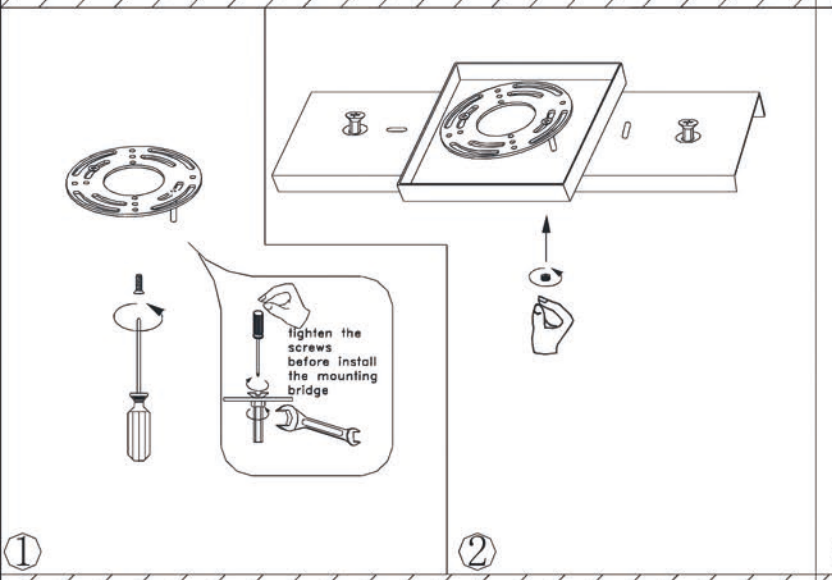

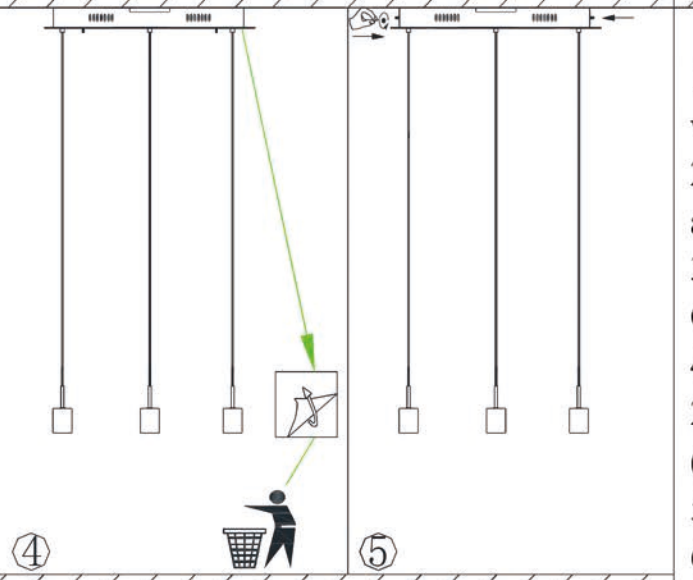

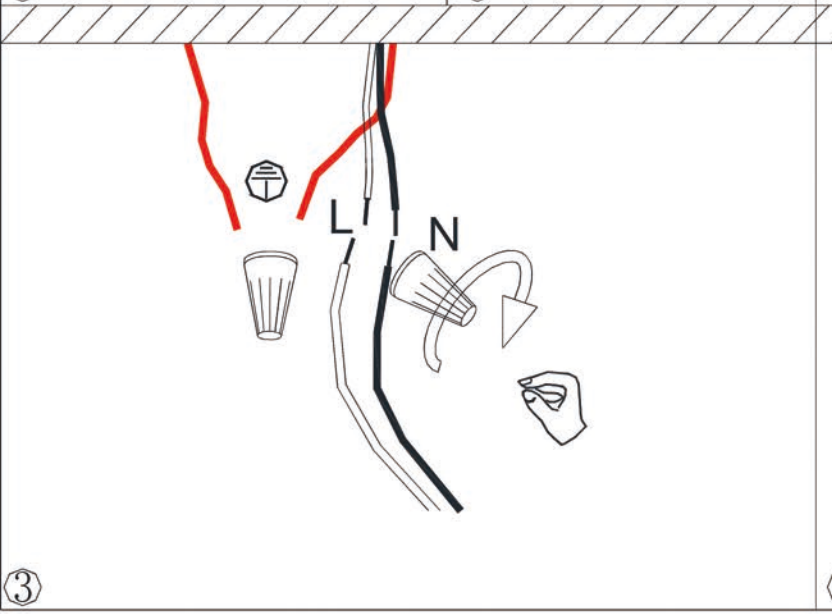

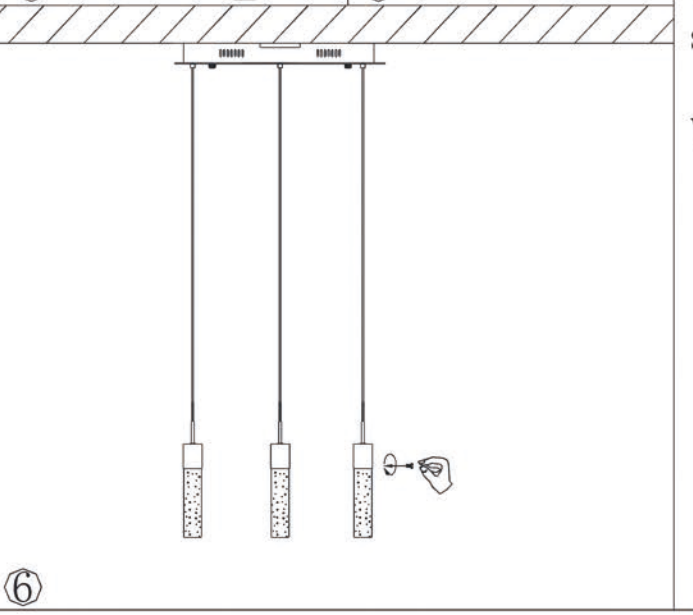

1.Turn breaker off for circuit on outlet where fixture is to be installed.
2.Remove mounting bracket from fixture and install to electrical box.
3.Wire fixture to wires in outlet box. Green wire is for Ground.
4.Install fixture to back-plate and tighten 2 nuts so that fixture meets the ceiling. (Figure 5)
5.Remove protective paper from fixture
6.Install glass into holders using 2 screws supplied (Figure 6)

WARNING!

This fixture may be dimmed using standard triac dimmer. For maximum adjustability We recommend Lutron CL series dimmers.