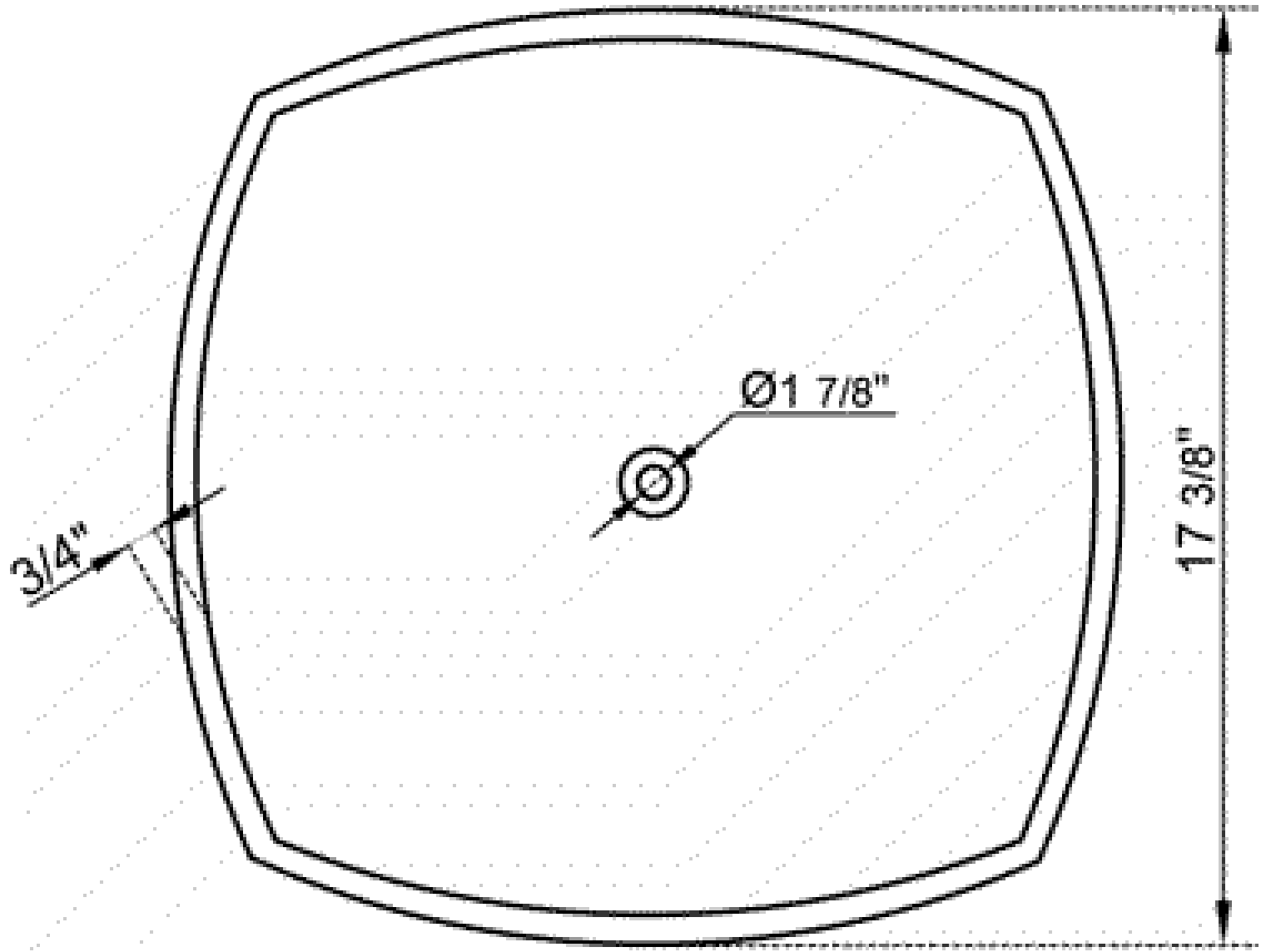
Ø1 7/8"
3/4"
17 3/8"

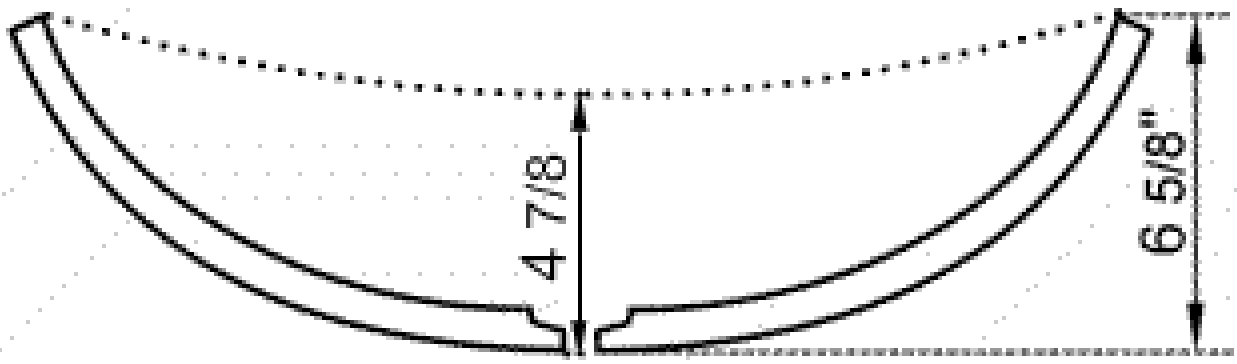
4 7/8
6 5/8"