ILL-408C-PC

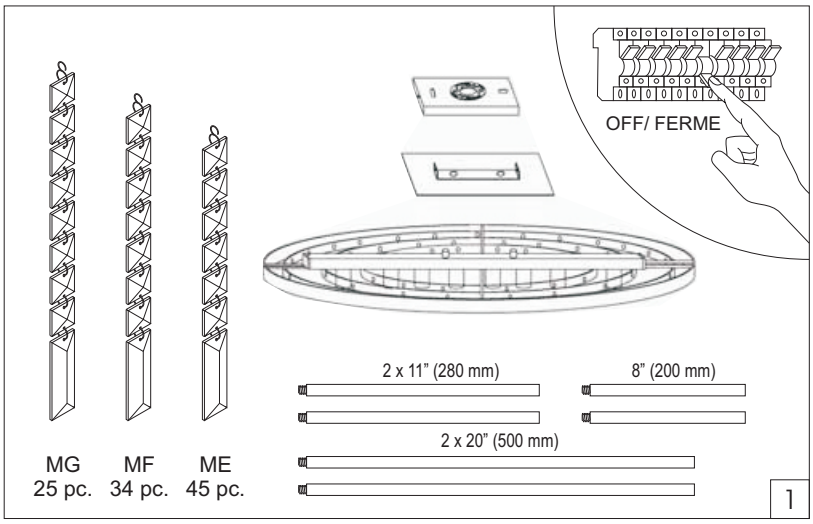

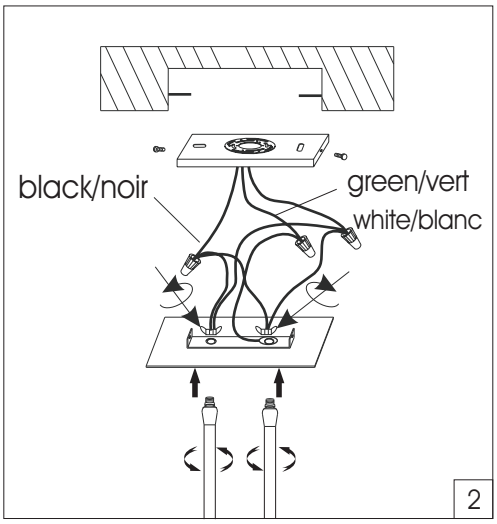

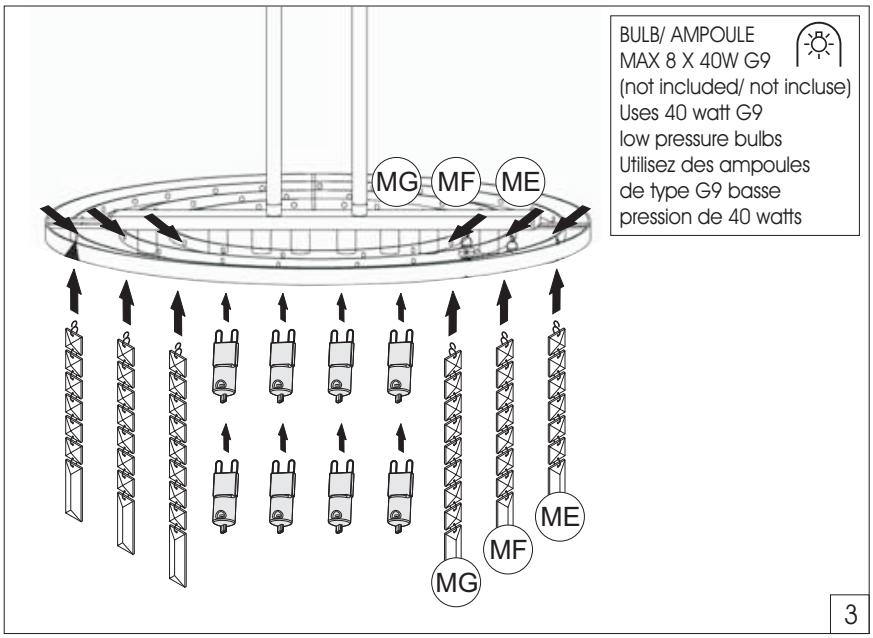

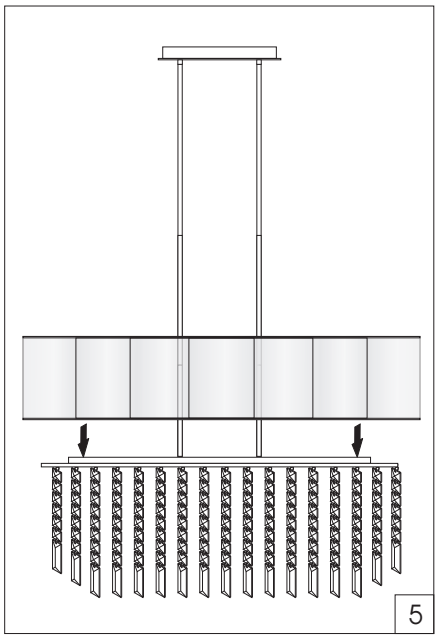

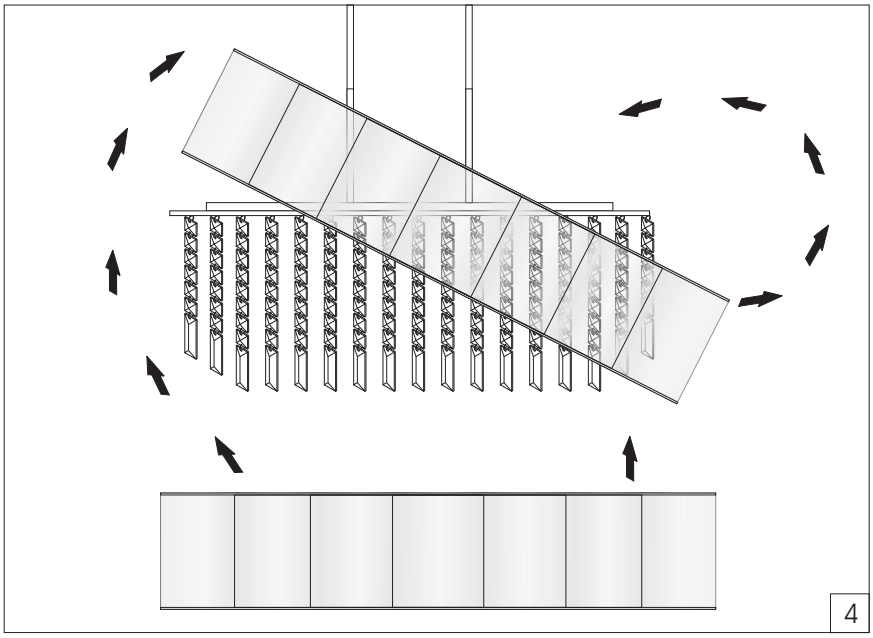

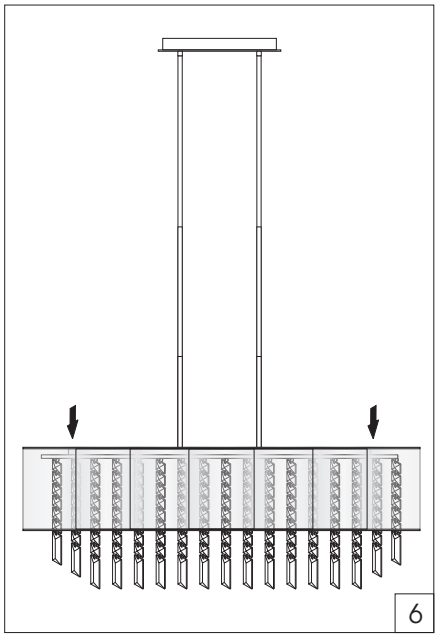

1401 Courtneypark Drive East, Mississauga, Ontario, Canada, L5T 2E4
Tel: 905.564.1262 Fax: 905.564.1299 E-mail: dainolite@dainolite.ca Web: www.dainolite.ca

16 Jul 2012