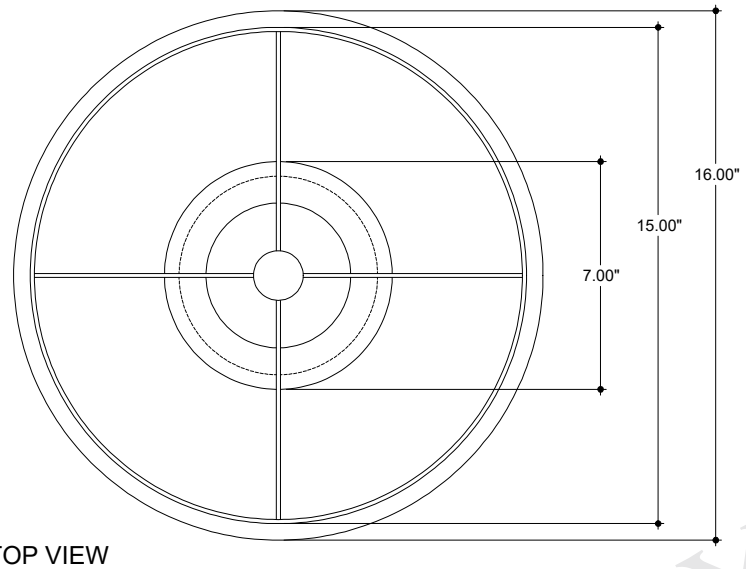

TOP VIEW

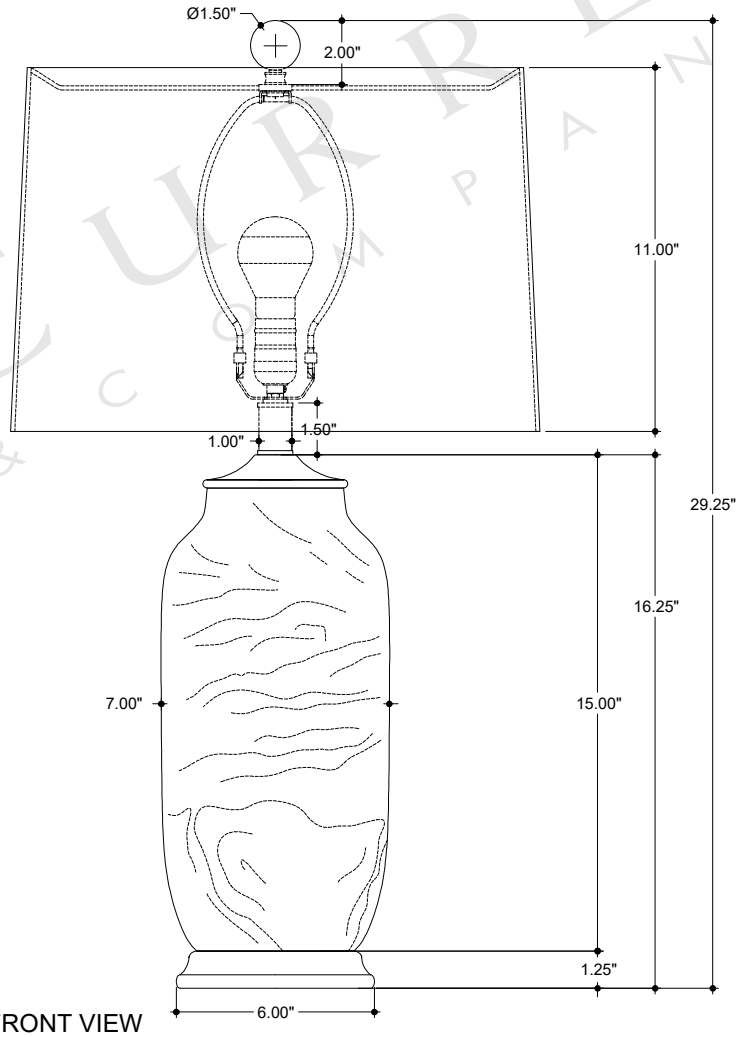

FRONT VIEW

6000-0339

ALL WORK © 2018 CURREY & COMPANY