334.382.1991 • 334.382.1543 fax
PO Box 428 • 200 Industrial Parkway
Greenville, AL 36037
www.corstonesinks.com
info@corstonesinks.com

CorStone®

Model 24 Avondale

Advantage 3.2 Series

- Double Bowl Kitchen
- Self-Rim
- 1, 2, 3 & 4 Hole
- 60/40 with Deco Rim

33" x 22" x 10¾" x 8½"

838.2mm x 558.8mm x 273.05mm x 215.9mm

Cutout dimensions: 31" x 20" with 1" radius corners.

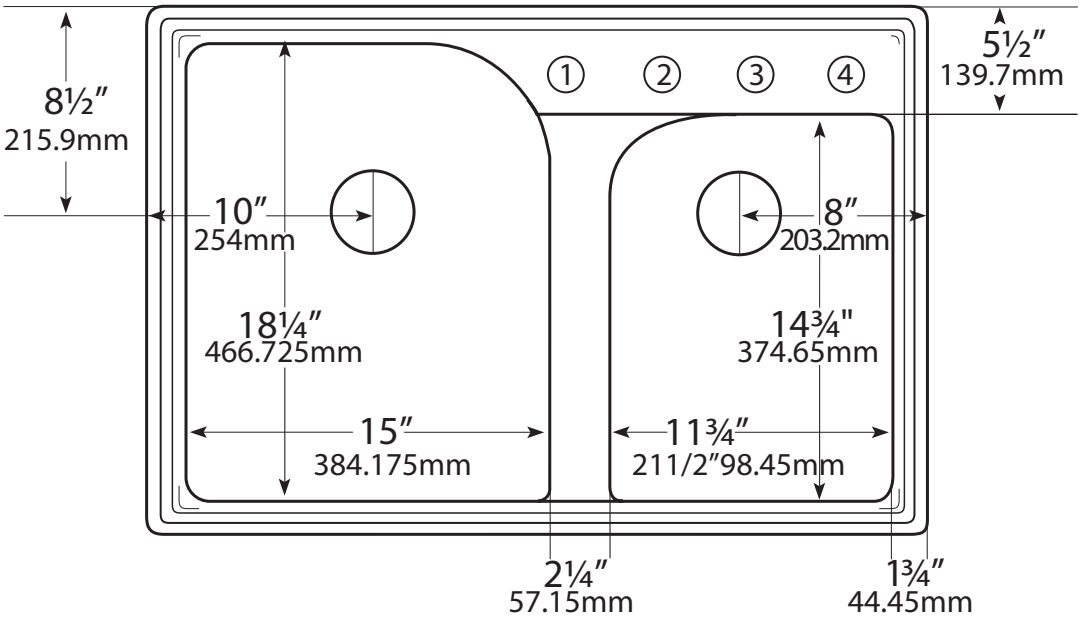

Drains not included.

Certified by: National Association of Homebuilders (NAHB) Research Center and CSA International

Meets or Exceeds:

CSA B45.0-02	ANSI Z 124.3 - 1995
CSA B45.5-02	ANSI Z 124.6 - 1997

All designs and specifications subject to change without notice

All dimensions are ±1/4" (6.35 mm)

United States Patents US437,035, US441,853, US442,679, US453,554, US457,944 and other Patents Pending may apply.

900051 © 2009 CorStone, Inc.