SINK SPECIFICATIONS

BLANCO STEELART®

BLANCO ARCON™ 1-3/4 REVERSE Under Mount

Model 516098

FEATURED MODEL

516098 10" & 10" bowl depths

FEATURES

- 304 Series Stainless Steel
- 18 Gauge Stainless Steel
- 18/10 Chrome-Nickel Content
- Satin Polished Finish
- Limited lifetime warranty

CODE/STANDARDS COMPLIANCE

ASM E 112.19.3-00

IAPMO/UPC listed

OPTIONAL ACCESSORIES

Stainless Steel Sink Grid (right bowl) 516368

Stainless Steel Sink Grid (left bowl) 516369

WARRANTY

BLANCO'S STEELART sinks feature a LIMITED LIFETIME WARRANTY to be free of all manufacturing defects under normal use. See our complete warranty for details.

While BLANCO America endeavors to provide accurate information, all dimensions are nominal, cannot be guaranteed, and are subject to change or cancellation. BLANCO assumes no responsibility for use of superseded or voided specifications.

PRODUCT SPECIFICATION

Undermount sink to be 32.9" in length and 20" in front-to-back depth. Sink to be handcrafted from a single panel of 18 gauge, 304 series stainless steel, with 18/10 chrome/nickel content and satin polished finish. Sink to feature zero radius corners and rear drain placement. Sink to be BLANCO Model 516098, with bowl depths of 10".

JOB INFORMATION

Job Name: _____

Contact: _____

Date Specified: _____

Specifier: _____

Contractor: _____

MODEL 516098

NOMINAL DIMENSIONS

OVERALL	CUTOUT SIZE	BOWL DEPTHS LEFT	BOWL DEPTHS RIGHT	DRAIN FITTING
32.9 x 20	Template provided with approximate 1/8" reveal	10	10	3-1/2

DXF cutout templates available on our web site.

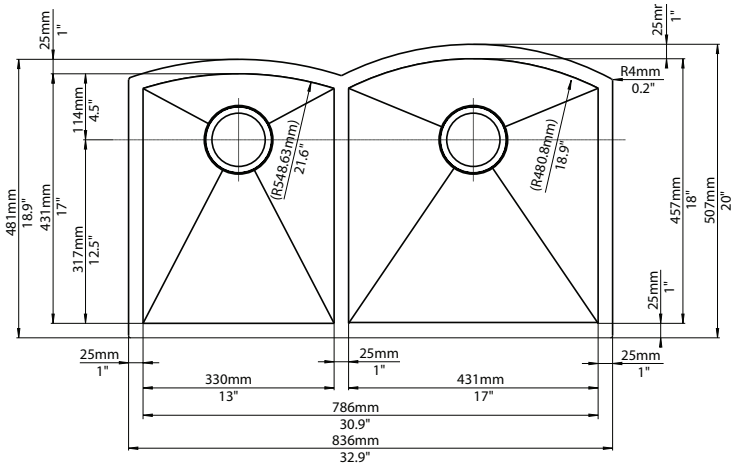

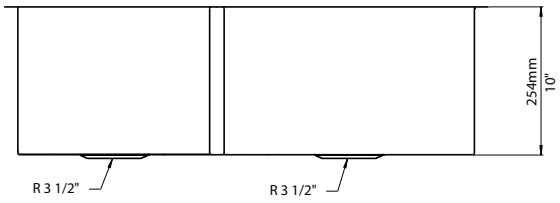

BLANCO
800.451.5782
www.blancoamerica.com

© 2009 BLANCO