AXOR

hansgrohe

Brand	AXOR
Art. Name	**AXOR Citterio** Thermostatic Trim with Volume Control and Diverter
Art. Nr.	39720341
Surface	brushed black chrome
Pos.	1

Product Picture

Drawing

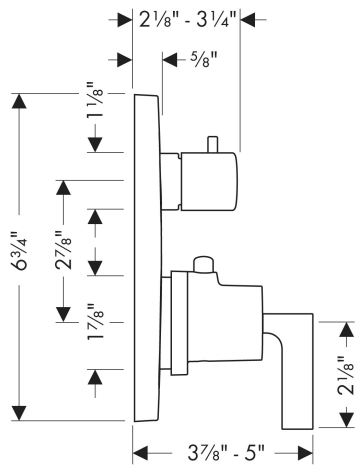

Features

- Volume control and diverter for 2 outlets
- Flow: 7.0 GPM (26.5 L/Min)
- Thermostatic cartridge, Shut-off/ diverter valve
- Anti-scald 100° safety stop