SUT25BK / SUT25CW / SUT25GB

Features

- Single 18" oval undermount sink cutout
- 8" widespread faucet holes
- 4" backsplash included
- Sink clips included

Colors / Finishes

- BK - Natural Black granite
- CW - Natural Carrera White marble
- GB - Natural Galala Beige marble

Nominal Dimension

- 25W x 22D x 1H inches
- 635 x 560 x 25 mm

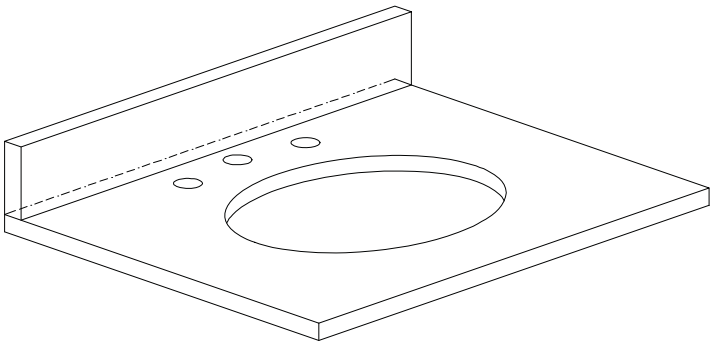

Components

Sink	CUM18WT	CUM18LN	
Vanity	BROOKS-V24	HAMILTON-V24	KELLY-V24
	LEXINGTON-V24	LOFT-V24	NAPA-V24
	TRIBECA-V24	TROPICA-V24	WESTWOOD-V24

Product Diagrams

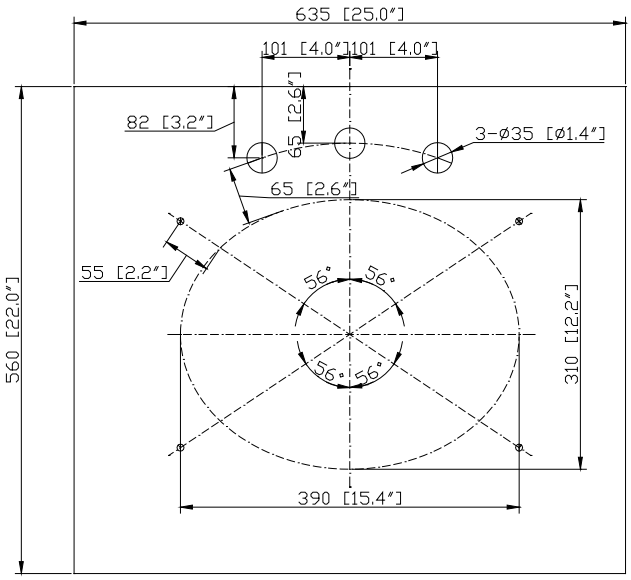

Top

Side