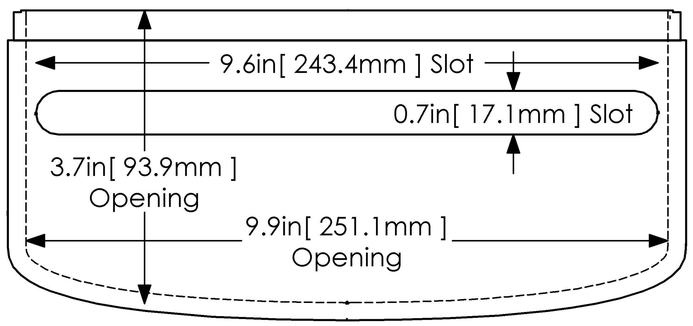
9.6in[243.4mm] Slot
0.7in[17.1mm] Slot
3.7in[93.9mm]
Opening
9.9in[251.1mm]
Opening

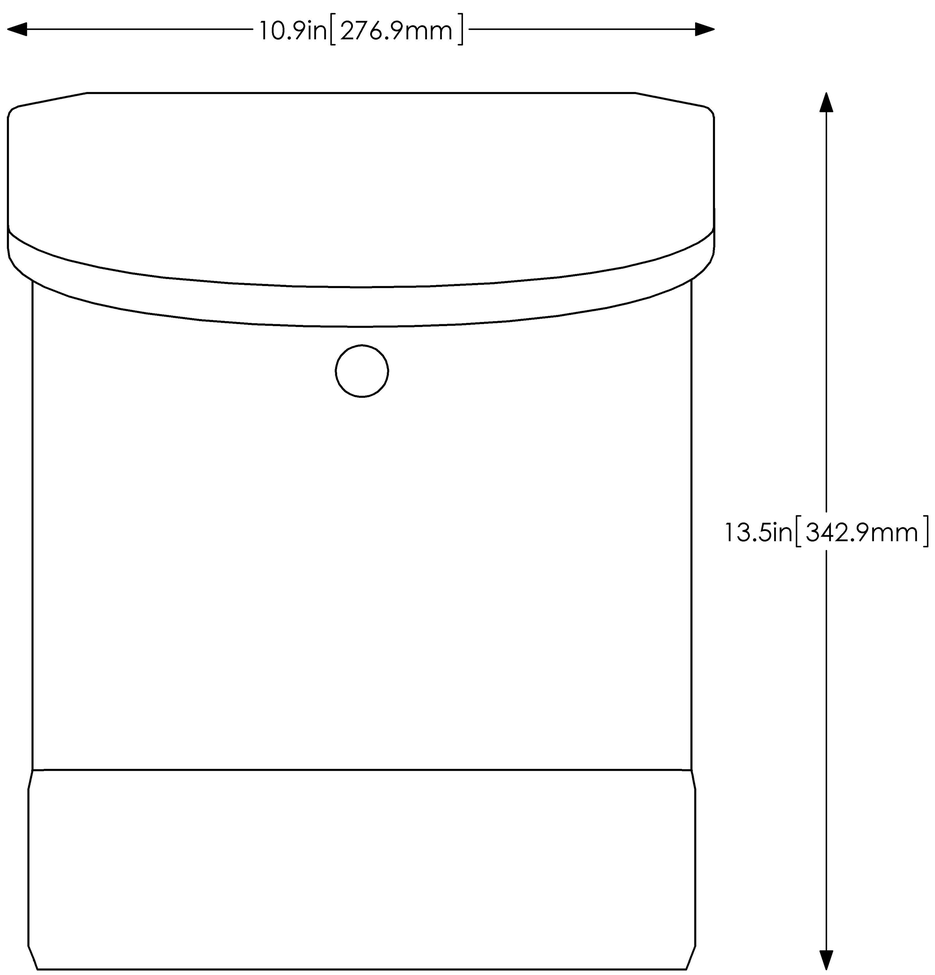
10.9in[276.9mm]
13.5in[342.9mm]

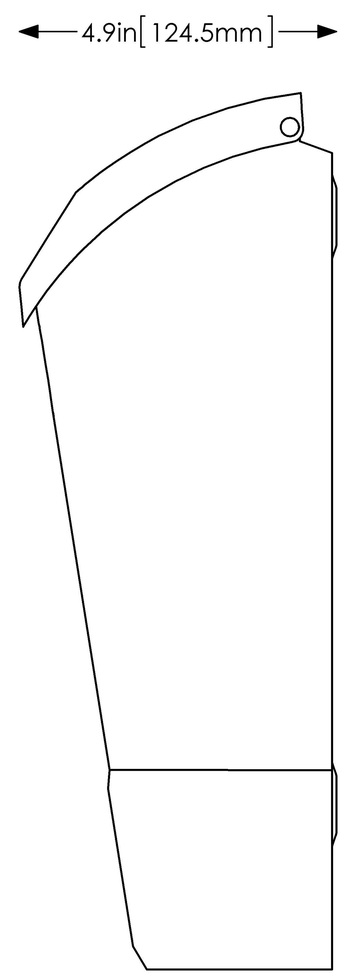
4.9in[124.5mm]

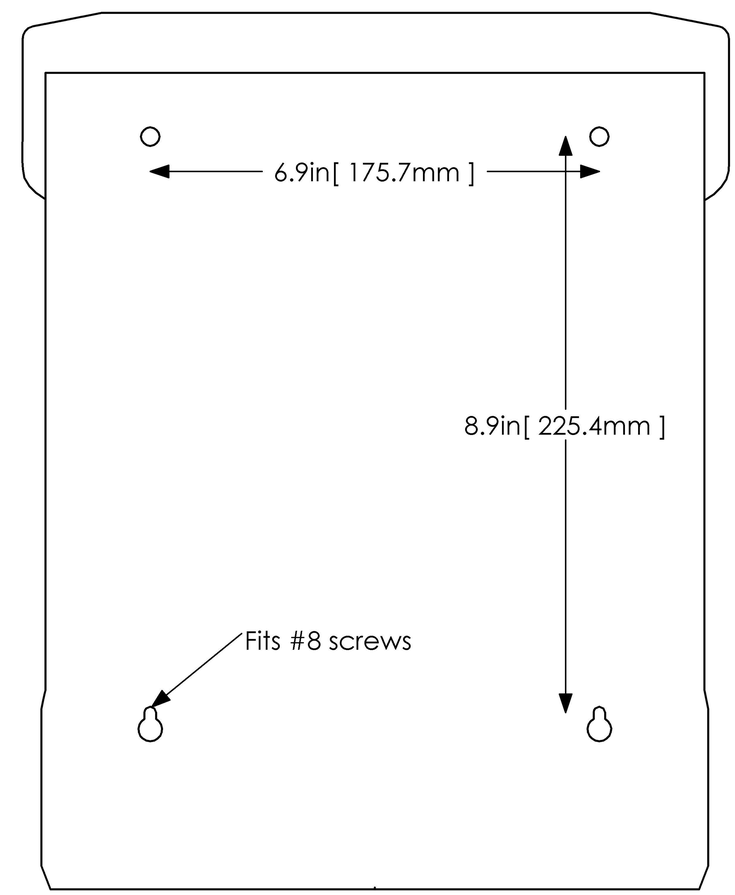
6.9in[175.7mm]
8.9in[225.4mm]
Fits #8 screws