aquabrass

Kuezeen 8745

Bar faucet

TECHNICAL SPECIFICATIONS

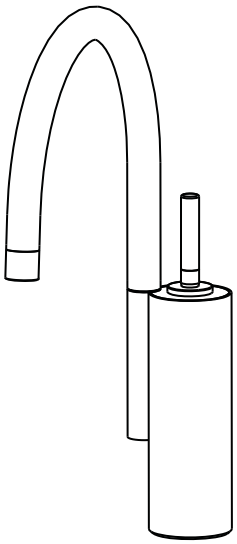

FEATURES:
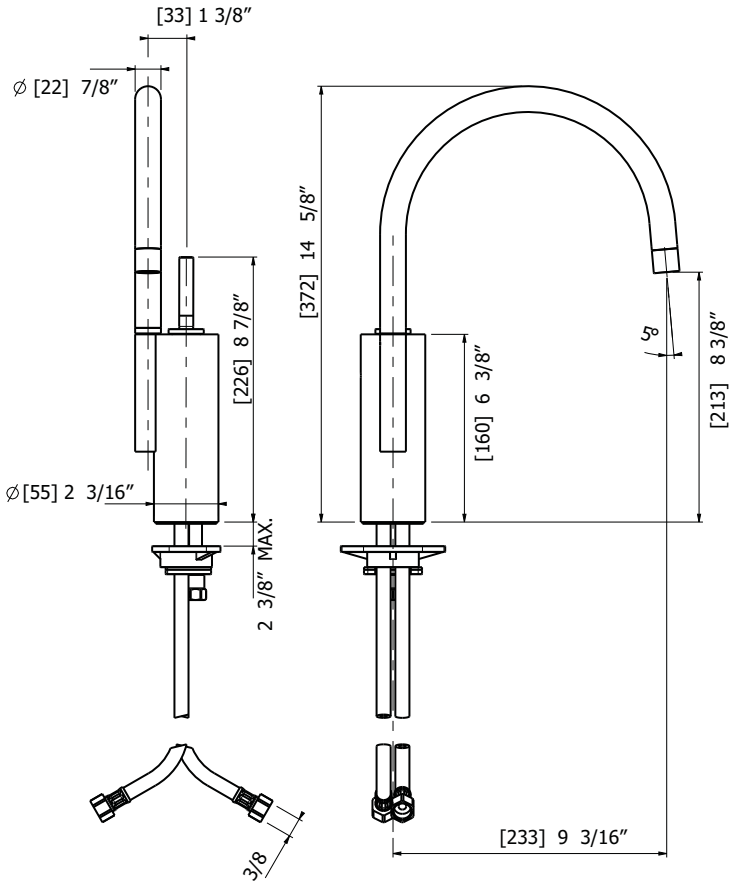
- 100% stainless steel construction
- High quality finishing
- 9 3/16” spout C to C
- Swivel spout
- 2.2 GPM water conservation aerator