MOEN

Buy it for looks. Buy it for life.®

# Illustrated Parts

## WATERHILL™
## Two-Handle Kitchen Bridge Faucet with Side Spray

| MODEL | TYPE | FINISH |
|---|---|---|
| S713 | Lever | Chrome |
| S713CSL | Lever | Classic Stainless |
| S713WR | Lever | Wrought Iron |
| S713ORB | Lever | Oil Rubbed Bronze |
| **DISCONTINUED** | | |
| S713NL | Lever | Nickel |
| S713SL | Lever | Stainless |

■ **Order by Part Number**

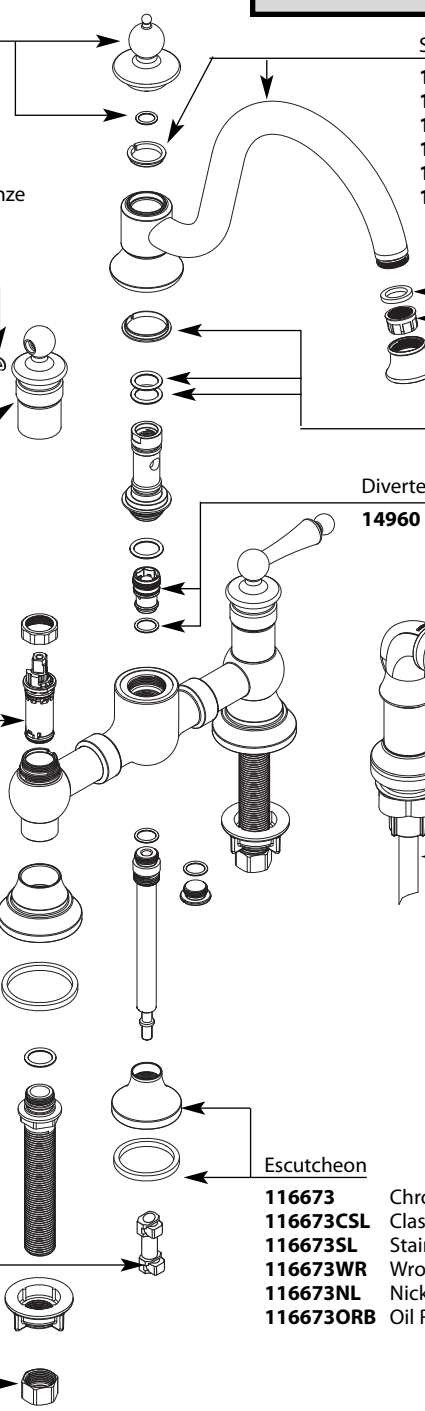

Spout Cap

| | |
|---|---|
| **116640** | Chrome |
| **116640CSL** | Classic Stainless |
| **116640SL** | Stainless |
| **116640WR** | Wrought Iron |
| **116640NL** | Nickel |
| **116640ORB** | Oil Rubbed Bronze |

Spout Kit

| | |
|---|---|
| **116641** | Chrome |
| **116641CSL** | Classic Stainless |
| **116641SL** | Stainless |
| **116641WR** | Wrought Iron |
| **116641NL** | Nickel |
| **116641ORB** | Oil Rubbed Bronze |

Aerator Kit

| | |
|---|---|
| **116618** | Chrome |
| **116618CSL** | Classic Stainless |
| **116618BN** | Stainless |
| **116618WR** | Wrought Iron |
| **116618NL** | Nickel |
| **116618ORB** | Oil Rubbed Bronze |

Temperature Indicators

**118306**

Handle Insert

| | |
|---|---|
| **116628** | Chrome |
| **116628CSL** | Classic Stainless |
| **116628BN** | Stainless |
| **116628WR** | Wrought Iron |
| **116628NL** | Nickel |
| **116628ORB** | Oil Rubbed Bronze |

Handle Hub Kit, Hot

| | |
|---|---|
| **116670** | Chrome |
| **116670CSL** | Classic Stainless |
| **116670SL** | Stainless |
| **116670WR** | Wrought Iron |
| **116670NL** | Nickel |
| **116670ORB** | Oil Rubbed Bronze |

Handle Hardware Kit, Cold

| | |
|---|---|
| **116671** | Chrome |
| **116671CSL** | Classic Stainless |
| **116671SL** | Stainless |
| **116671WR** | Wrought Iron |
| **116671NL** | Nickel |
| **116671ORB** | Oil Rubbed Bronze |

Diverter

**14960**

Cartridge

**1224**

**FOR MODELS WITH HYDROLOCK® CONNECTION**

Side Spray, Hose, and Hose Guide

| | |
|---|---|
| **136104** | Chrome |
| **136104CSL** | Classic Stainless |
| **136104SL** | Stainless |
| **136104WR** | Wrought Iron |
| **136104NL** | Nickel |
| **136104ORB** | Oil Rubbed Bronze |

**FOR MODELS WITH THREADED CONNECTION**

Side Spray, Hose, and Hose Guide

| | |
|---|---|
| **141000** | Chrome |
| **141000SL** | Stainless |
| **141000WR** | Wrought Iron |
| **141000NL** | Nickel |
| **141000ORB** | Oil Rubbed Bronze |

Handle Escutcheon

| | |
|---|---|
| **116672** | Chrome |
| **116672CSL** | Classic Stainless |
| **116672SL** | Stainless |
| **116672WR** | Wrought Iron |
| **116672NL** | Nickel |
| **116672ORB** | Oil Rubbed Bronze |

Escutcheon

| | |
|---|---|
| **116673** | Chrome |
| **116673CSL** | Classic Stainless |
| **116673SL** | Stainless |
| **116673WR** | Wrought Iron |
| **116673NL** | Nickel |
| **116673ORB** | Oil Rubbed Bronze |

Hydrolock® Connection

**136102**

Mounting Hardware

**13678**